ELECTRICAL SPECIFICATION

NOMINAL IMPEDANCE	50 OHMS
POLARIZATION	DUAL SLANT 45°, LINEAR
BANDWIDTH	4.9-5.9GHz
GAIN	10-13 dBi
VSWR	TIPICAL 2.0:1
	MAX 2.5:1

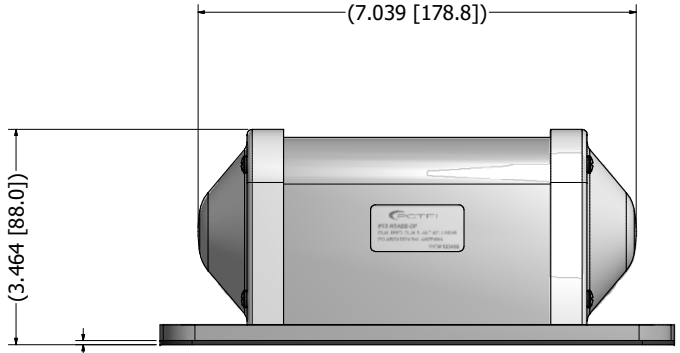

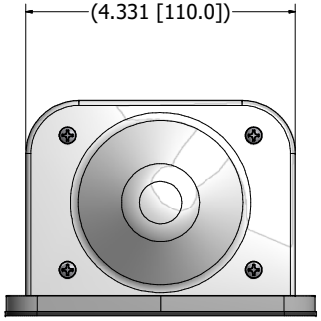

EPDM RUBBER,
1.6 MM THICK,
60A DUROMETER

4x Ø.335 [8.5]
MOUNTING HOLES

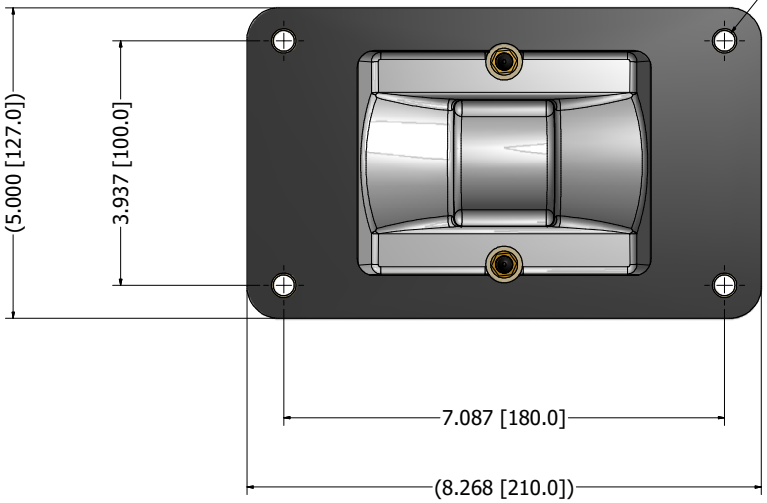

SUPPLIER PRINT ACCEPTANCE:

[ ] Accept drawing/specification:
No changes needed:
[ ] This part is RoHS compliant
[ ] This part is REACH compliant
[ ] Accept drawing/specification.
Notes/Mark-ups added
[ ] Cannot accept drawing/spec.
Notes/Mark-ups added
Supplier Projected Outgoing Quality:

SIGMA LEVEL :_____or PPM:_____

Signature_____Date:_____

UNLESS OTHERWISE SPECIFIED
DIMENSIONS ARE IN MILLIMETERS

FOR TOLERANCES NOT SPECIFIED USE:
[X mm ± 3 mm] [X.X mm ± .3 mm]
[.XXX mm ± .13 mm] ANGULAR± 1°

THIRD ANGLE PROJECTION

PCTEL PROPRIETARY DATA

THE INFORMATION AND/OR DRAWINGS CONTAINED IN THIS DOCUMENT IS CONFIDENTIAL AND PROPRIETARY TO PCTEL, INC. AND MAY NOT BE USED, REPRODUCED, IN WHOLE OR IN PART, OR MODIFIED IN ANY WAY WITHOUT THE EXPRESS WRITTEN PERMISSION OF AN AUTHORIZED REPRESENTATIVE OF PCTEL, INC.

DRAWN: CPOD	DATE: 9/14/2017	
CHECKED:	DATE:	
MATERIAL:		
FINISH:		

PCTEL, INC.
471 BRIGHTON DRIVE
BLOOMINGDALE, IL 60108
PH: 630-372-6800
FAX. 630-372-8077

DESCRIPTION: DUAL SLANT 45° BIDIRECTIONAL ANTENNA 5GHZ

DRAWING NO.: PCT-RSABD-DP-ODD

SIZE: D | SCALE: 1:1 | SHEET: 1 OF 1